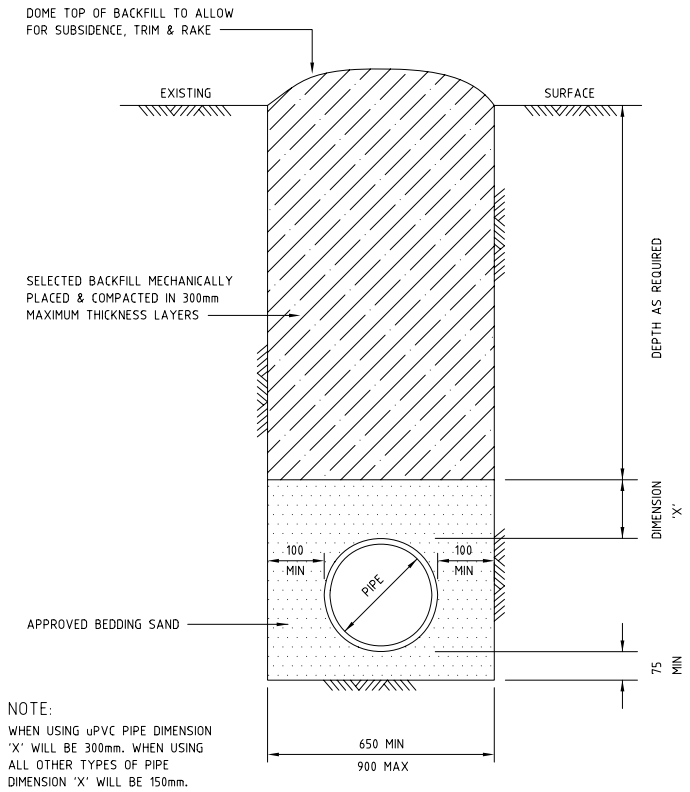

NOTE:
WHEN USING uPVC PIPE DIMENSION 'X' WILL BE 300mm. WHEN USING ALL OTHER TYPES OF PIPE DIMENSION 'X' WILL BE 150mm.

STANDARD BACKFILL DETAIL
OPEN AREAS

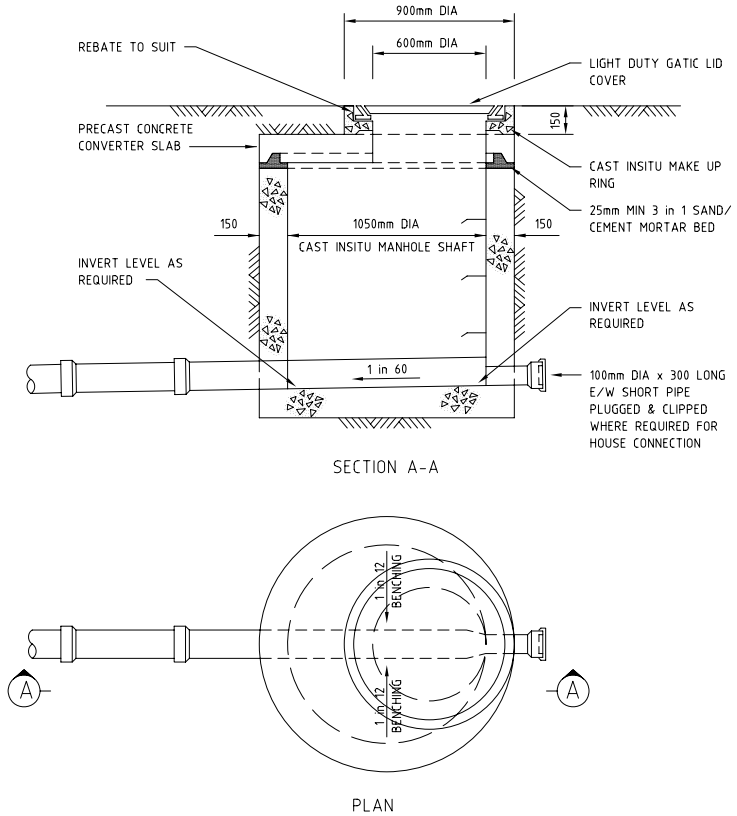

STANDARD CONSTRUCTION DETAIL OF
SEWER MANHOLE (LESS THAN 1.50m DEEP)

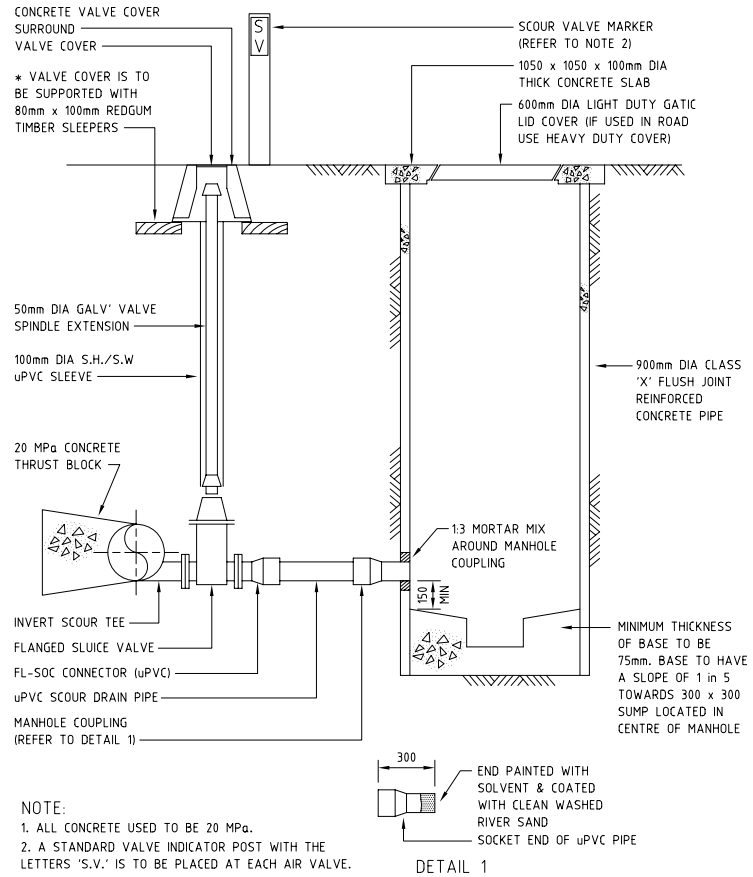

NOTE:
1. ALL CONCRETE USED TO BE 20 MPa.
2. A STANDARD VALVE INDICATOR POST WITH THE LETTERS 'S.V.' IS TO BE PLACED AT EACH AIR VALVE.

STANDARD DETAIL OF SEWER RISING
MAIN SCOUR VALVE ASSEMBLY

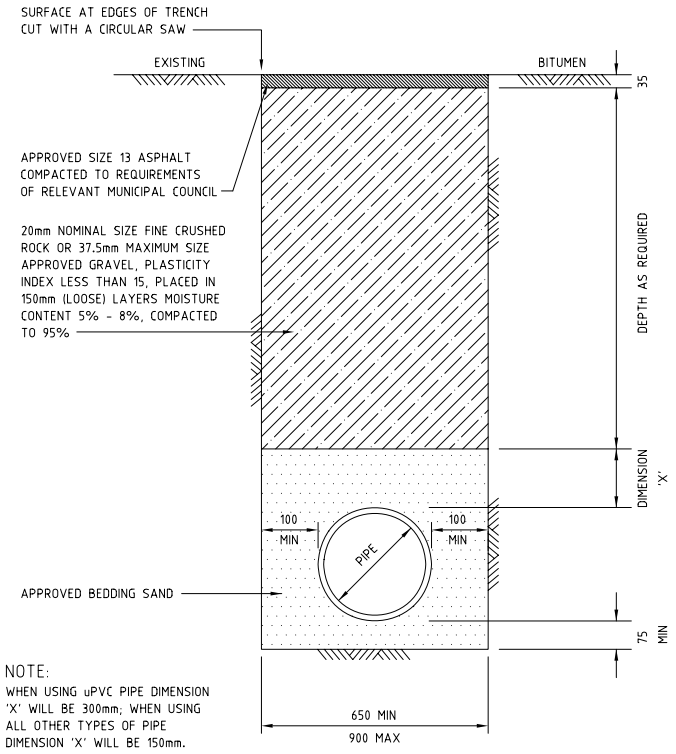

NOTE:
WHEN USING uPVC PIPE DIMENSION 'X' WILL BE 300mm; WHEN USING ALL OTHER TYPES OF PIPE DIMENSION 'X' WILL BE 150mm.

STANDARD BACKFILL DETAIL
BENEATH ROAD PAVEMENTS

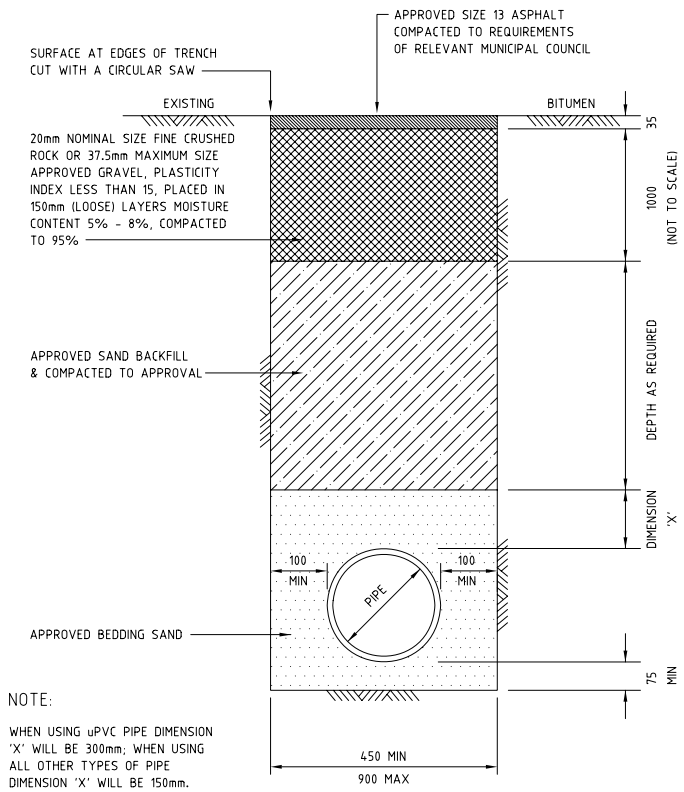

NOTE:
WHEN USING uPVC PIPE DIMENSION 'X' WILL BE 300mm; WHEN USING ALL OTHER TYPES OF PIPE DIMENSION 'X' WILL BE 150mm.

STANDARD BACKFILL DETAIL
BENEATH ROAD PAVEMENTS
(ALTERNATIVE - AS DIRECTED)

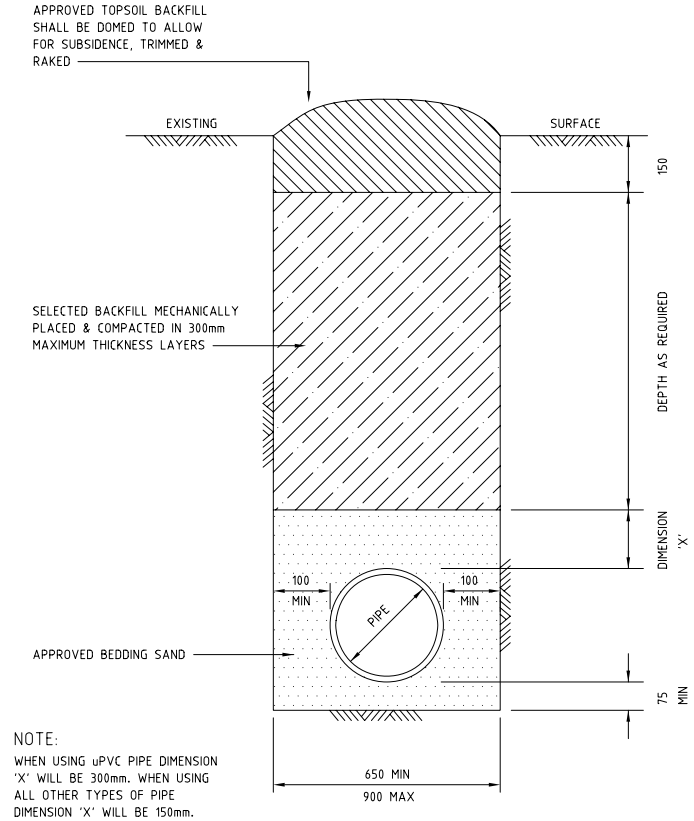

NOTE:
WHEN USING uPVC PIPE DIMENSION 'X' WILL BE 300mm. WHEN USING ALL OTHER TYPES OF PIPE DIMENSION 'X' WILL BE 150mm.

STANDARD BACKFILL DETAIL
BENEATH GRASSED AREAS

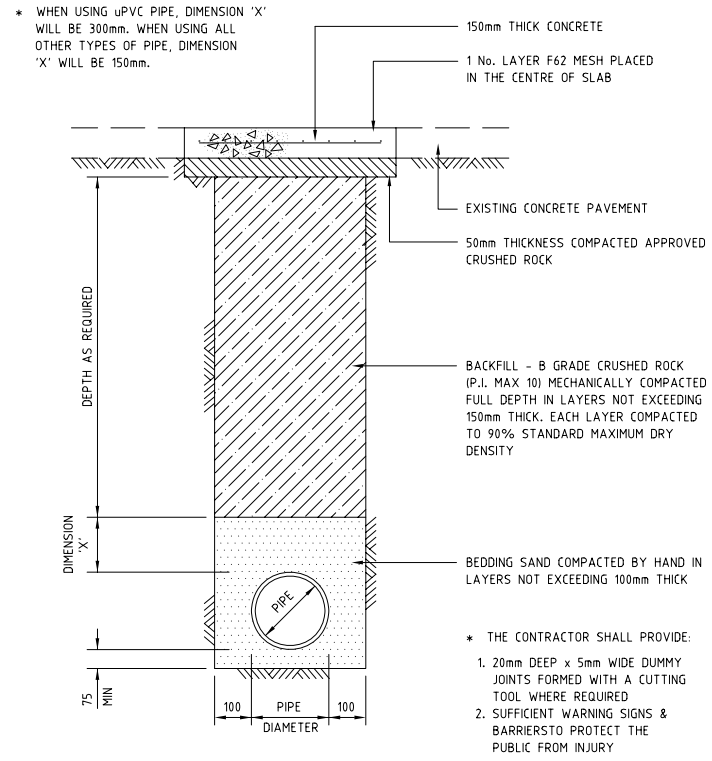

* THE CONTRACTOR SHALL PROVIDE:
1. 20mm DEEP x 5mm WIDE DUMMY JOINTS FORMED WITH A CUTTING TOOL WHERE REQUIRED
2. SUFFICIENT WARNING SIGNS & BARRIERSTO PROTECT THE PUBLIC FROM INJURY

STANDARD BACKFILL DETAIL
BENEATH CONCRETE PAVEMENTS

CAD: \STANDARD\STD02 REV A

SHEET	1 OF 1
GLA No.	

LEGEND

NOTES

1. ALL DIMENSIONS ARE IN MILLIMETRES UNLESS OTHERWISE NOTED

ITEM No.	AMENDMENT DESCRIPTION	BY	APP	DATE
A	AIR VALVE DETAIL REMOVED	DB	SN	30/04/07

COPYRIGHT ©
INFORMATION CONTAINED ON THIS DRAWING IS THE PROPERTY OF GOULBURN VALLEY WATER. COPYING OR USING THIS DRAWING IN WHOLE OR PART WITHOUT WRITTEN PERMISSION INFRINGES COPYRIGHT !

GOULBURN VALLEY WATER
104-110 FRYERS ST. SHEPPARTON
P.O. BOX 185
PH. 058 218477
FAX. 058 311467

STANDARD DETAIL DRAWING -
SEWERAGE CONTRACTS

REVISION **A**

REFERENCE No. **STD/2**

SCALE	DESIGN	DRAWN	CHECKED	APPROVED
NOT TO SCALE	L.B.	DATE NOVEMBER 1992	DATE	DATE